Gyeongsang National University uses NI AWR Software to analyze Signal Interference in passive UHF RFID-Systems

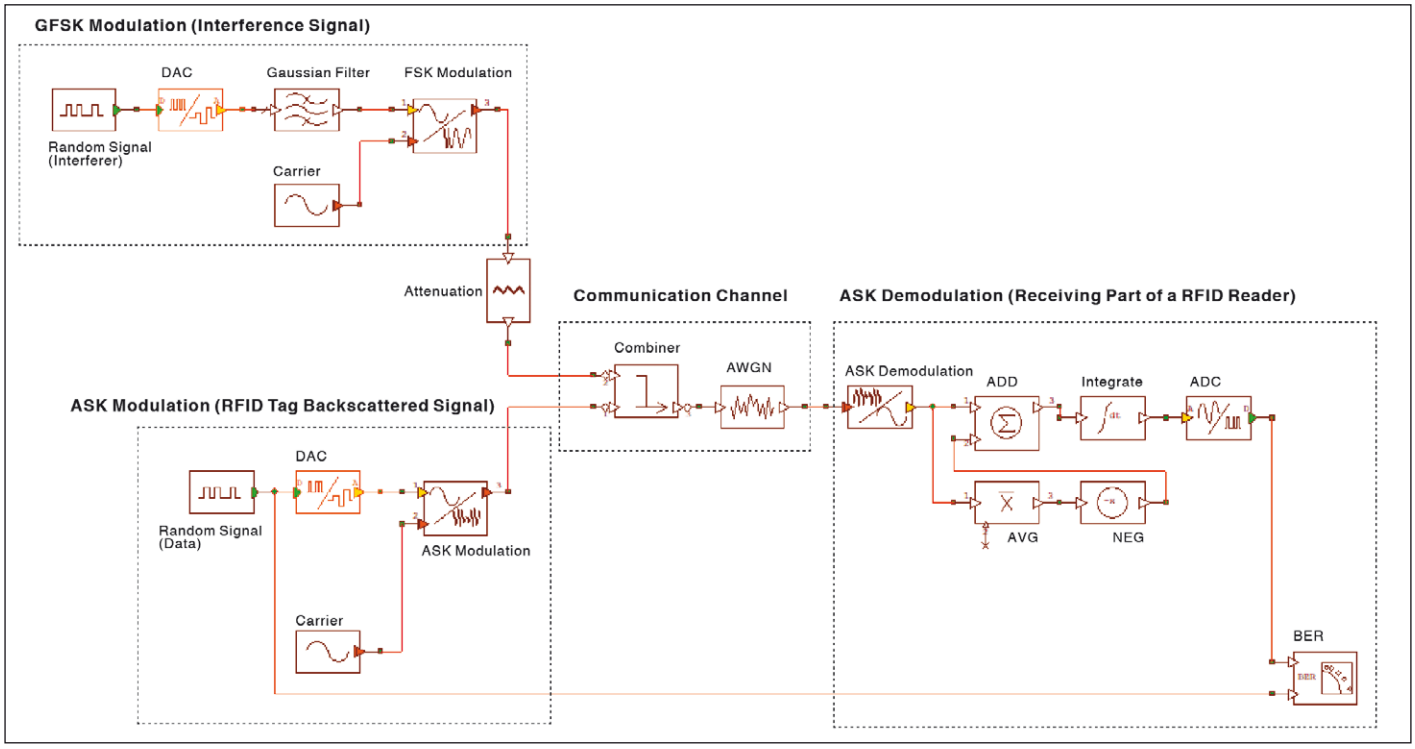

Figure 1: Overall block diagram of an RFID tag-to-reader communication link configured to analyze the performance impact in a UHF RFID system under an interference signal.

Application: RFID System
Software: NI AWR Design Environment, Visual System Simulator
National Instruments
www.ni.com/awr

Ultra-high frequency (UHF) radio-frequency identification (RFID) technology is being adopted by a variety of applications such as inventory control tracking, race timing, attendee tracking, access control, and more. Several sub-1 GHz wireless technologies are being standardized and developed that operate at a specific frequency within the 902...928 MHz industrial, scientific, and medical (ISM) bands. However, a significant challenge is performance degradation of UHF RFIDs due to RF interference.

Prof. Wang-Sang Lee and his team used NI AWR Design Environment, specifically Visual System Simulator (VSS) system design software, to consider the electromagnetic interference (EMI) effects of an RFID signal against the sub 1 GHz wireless communication signal and to analyze the impact of RF interference from a Gaussian frequency-shift keying (GFSK) modulated signal in a passive UHF RFID system.

Figure 1 shows an overall block diagram of an RFID tag-to-reader communication link confi-

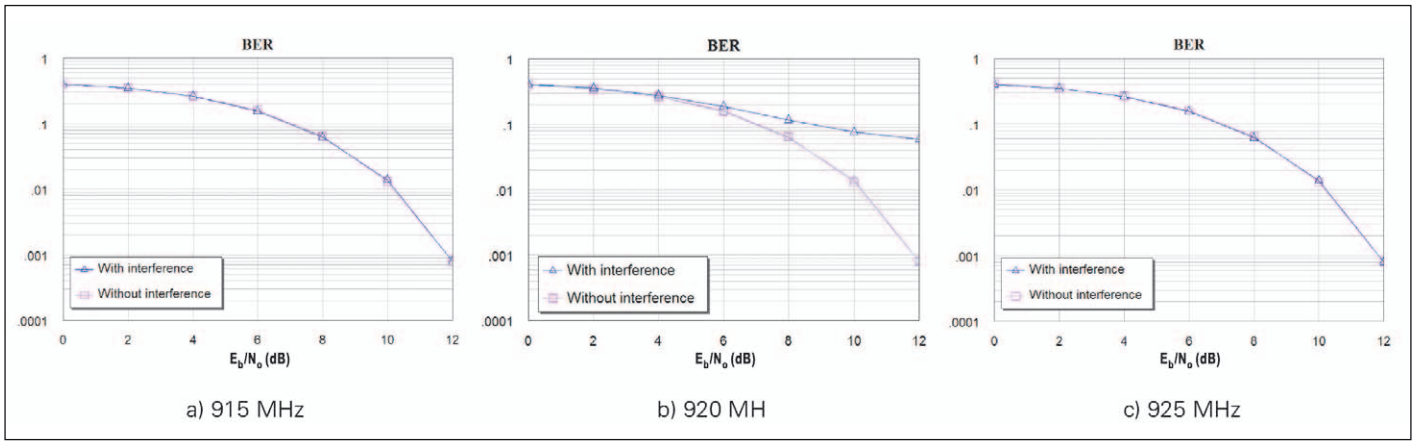

Figure 2: Simulated BER performance of the UHF RFID system

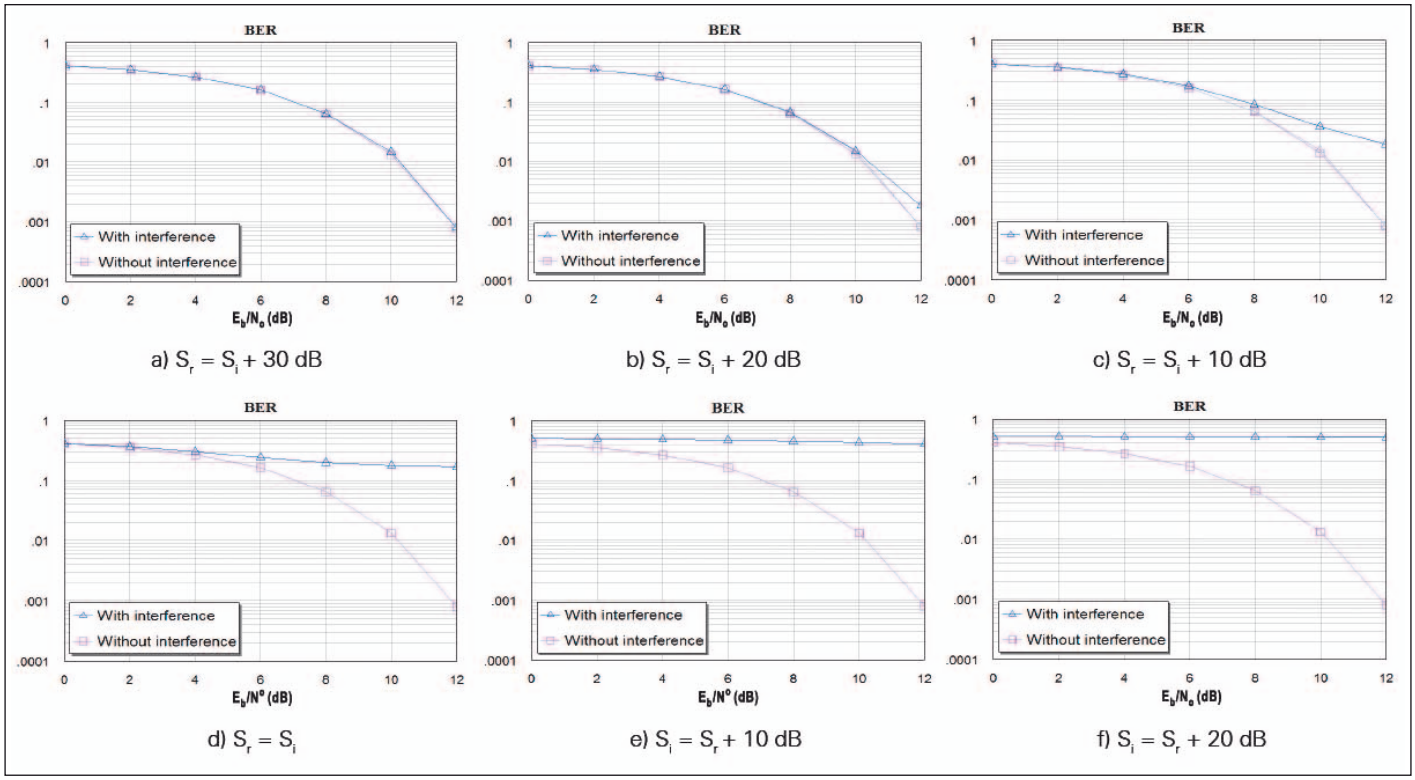

Figure 3: Simulated BER performance of the UHF RFID system

gured to analyze the performance impact of an interference signal in a UHF RFID system.

The block diagram consists of the backscatter signal generation of the RFID tag, GFSK-modulated interference signal generation with a frequency sensitivity of 17.675 Hz/V, communication channel, and demodulation of the UHF reader.

To simplify the simulation analysis, RF front-end circuits such as transmit and receive antennas, a bandpass filter, an RF switch for time-division multiplexing (TDD), an amplifier, and a downconversion mixer, were omitted. To compare the EMI effects of the UHF RFID system, it was assumed that the system was a line-of-sight communication system with an additive white Gaussian noise (AWGN) communication channel. The reflection characteristics of the environment were not considered. The backscattered RFID and interference signals were reduced by antenna characteristics and the operating distance. The modulation index of the UHF RFID system was 0.8 and the data rate of those signals was 50 kpbs.

Figure 2 shows the simulated bit error rate (BER) performance of the UHF RFID system with an amplitude shift-keying (ASK) signal at 920 MHz against a GFSK-modulated interference signal with different operating frequencies where the power difference of signals between the RFID tag and the interference signals was 6 dB.

Figure 3 shows the simulated BER performance of the UHF RFID system with an ASK signal against a GFSK-modulated interference signal at 920 MHz for varying power differences between the backscattered RFID and interference signal.

Why NI AWR Design Environment? Through membership in the AWR University Program, Prof. Lee and his team had access to the complete suite of NI AWR software tools. The intuitiveness of the VSS software and detailed descriptions of each element enabled the team to quickly and easily analyze the RFID system. Additionally, the VSS examples related to recent RF system simulations available through the knowledgebase were very helpful, as was the responsive technical support staff.

Company Profile

Gyeongsang National University (GNU) is a national university governed under the ministry of education of the Republic of Korea. Located in Jinju, South Gyeongsang Province, GNU represents the South Gyeongsang Province of South Korea as one of 10 flagship Korean national universities. ◄