Test & Measurement

USB Pulse Power Sensors

AR RF/Microwave Instrumentation once again sets the standard with the introduction of its fast RF power measuring PSP series wideband USB pulse power sensors.

Built with Real-Time Power Processing technology, this new product line offers high speed and accuracy that customers demand. AR's USB pulse power sensors are ideal for EMC testing, manufacturing testing/troubleshooting, amplifier design/development, and research. These devices can be used in both commercial and military applications such as telecommunications (LTE-TDD/FDD), avionics, RADAR, and medical systems. They are the instrument of choice for fast, accurate and highly reliable RF and microwave power measurements. This application note will discuss some of the key features and benefits of AR's new line of PSP Series Wideband USB pulse power sensors as shown below.

How Does It Work?

The USB Pulse Power Sensor functions as an ultra-fast, calibrated power measurement tool which acquires and computes the instantaneous, average and peak RF power of a wideband modulated RF signal. An internal A/D converter operates at up to 100 MSamples/s, and a digital signal processor carries out the work required to form the digital samples into a correctly scaled and calibrated trace on the display.

The first and most critical component of a peak power sensor is the detector, which removes the RF carrier signal and outputs the amplitude of the modulating signal. The video detector's bandwidth dictates the sensor's ability to track the power envelope of the RF signal. The picture on the left in Figure 2 below shows how a detector with insufficient bandwidth is unable to faithfully track the signal's envelope, therefore affecting the accuracy of the power measurement. In contrast, the detector on the right has sufficient video bandwidth in order to track the envelope accurately.

It is possible for the detector to track very fast amplitude changes due to modulation, by optimizing the sensor's response time. The video bandwidth of the sensor must be at least as wide as the signal's modulation bandwidth in order to be able to accurately track it. The PSP001 provides an industry leading video bandwidth of 195 MHz for spread-spectrum signals, and measures rise times as fast as 3 ns. It has a sample rate of 100 MHz enabling the analysis of both very short bursts and very broadband signals, as well as power versus time waveforms in very high resolution.

Real Time Power Processing (RTPP) is a new signal processing technology which is a key factor in ensuring the accuracy of measurements. This advanced technique enables the sensors to constantly collect samples without any gaps in their acquisition, ensuring that no

USB Pulse Power Sensors
Application Note #73
ARRF/microwave Instrumentation
www.arworld.us

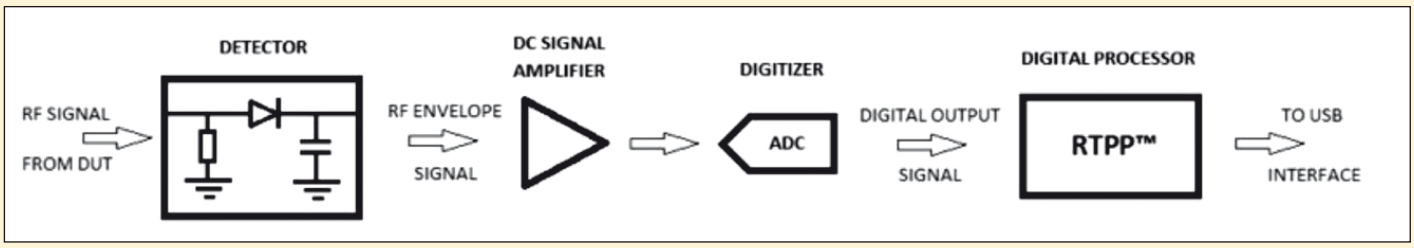

*RTPP-Real Time Power Processing

Figure 1: Block diagram of the peak power sensor

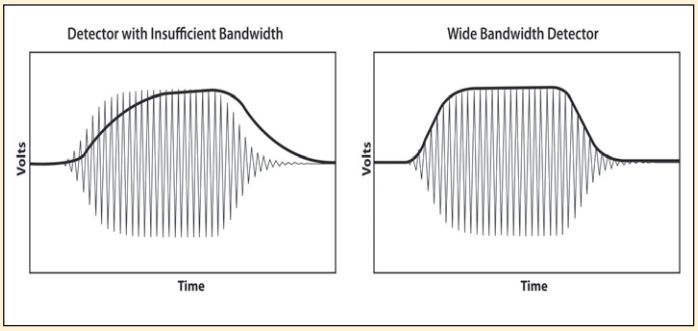

Figure 2: The Importance of Detector Bandwidth

data is lost. The conventional method involves collecting samples until the sensor's buffer is full, at which point acquisition stops until the collected samples are processed. RTPP collects and processes samples so quickly that the buffer is never filled. In order to create a trace on the screen, conventional meters and USB sensors carry out the required steps in sequence, which therefore means that processing can take as long as tens or hundreds of milliseconds. Real Time Power Processing performs many of these steps in parallel and at full acquisition rate, so it is not necessary to halt acquisition following a trigger event to wait for the processing stages to catch up.

Measurement of Amplifier compression using AR's PSP Series Wideband USB Pulse power sensors and PulsewARe:

Figure 3 shows an example of AR's PSP series demo set-up, where we make readings similar to a scalar analyzer to measure gain of an RF power amplifier. The PSP Series pulse power sensors are supported by both AR's emcware software and PulsewARe. PulsewARe is a Windows-based software package that provides control and readout of the sensors as shown in Figure 4.

It provides both time and statistical domain views of power waveforms with variable peak hold and persistence views. Power measurements are supported using automated pulse and statistical measurements, power level and timing markers.

The GUI application is easily configured with dockable or floating windows and measurement tables that can be edited to show only the measurements of interest.

With statistical analysis capability the PSP series can display the statistical distribution of the signal power level relative to its average power in a format called complementary cumulative dis-

Specifications	PSP001	PSP002	PSP003	PSP004	PSP005
RF Frequency Range	50 MHz to 6 GHz	50 MHz to 18 GHz	50 MHz to 40 GHz	50 MHz to 18 GHz	50 MHz to 40 GHz
Average Dynamic Range	-60 to+20 dBm	-34 to +20 dBm	-34 to +20 dBm	-50 to +20 dBm	-50 to +20 dBm
Pulse Dynamic Range	-50 to +20 dBm	-24 to +20 dBm	-24 to +20 dBm	-40 to +20 dBm	-40 to +20 dBm
Internal Trigger Range	-38 to +20 dBm	-10 to +20 dBm	-10 to +20 dBm	-27 to +20 dBm	-27 to +20 dBm
Risetime (fast/slow)	3 ns/<10 µs	5 ns/<10 µs	5 ns/<10 µs	<100 ns/<10 µs	<100 ns/<10 µs
Video Bandwidth	195 MHz/350 kHz	70 MHz/350kHz	70 MHz/350 kHz	6 MHz/350 kHz	6 MHz/350 kHz
Single-shot Bandwidth	35 MHz	35 MHz	35 MHz	6 MHz	6 MHz
RF Input	Type N, 50 ohm	Type N, 50 ohm	2.92 mm, 50 ohm	Type N, 50 ohm	2.92 mm, 50 ohm
VSWR	1.25 (0.05-6 GHz)	1.15 (.05-2.0 GHz) 1.28 (2.0-16 GHz) 1.34 (16-18 GHz)	1.25 (.05-4.0 GHz) 1.65 (4-38 GHz) 2.00 (38-40 GHz)	1.15 (.5-2.0 GHz) 1.20 (2.0-6.0 GHz) 1.28 (6.0-16 GHz) 1.34 (16-18 GHz)	1.15 (.05-2.0 GHz) 1.65 (4.0-38 GHz) 2.00 (38-40 GHz)

Key Features:

- Continuous Sample rate: 100 Msamples/sec
- Class leading Video Bandwidth: 195 MHz
- Trace acquisition speed: 100 k sweeps/sec
- Time resolution: 100 ps
- Effective Sample Rate: 10 Gsamples/sec
- Internal RF or External TTL trigger, Master/Slave in/out
- Statistical Measurements 100 Mpoints/sec
- Ultra-fast rise time: 3ns
- Real Time Power Processing: No latency due to buffer processing by host PC
- Synchronized multi-channel measurements

Table 1: PSP Series Wideband USB pulse power sensors and key features

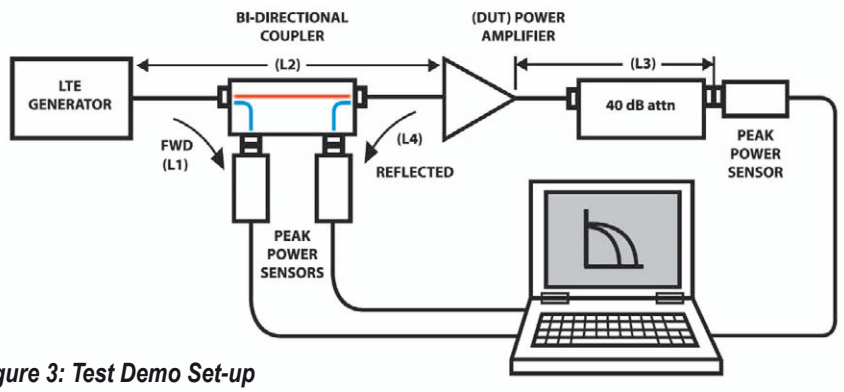

Figure 3: Test Demo Set-up

tribution function (CCDF), as well as the ratio of peak values to the effective value called crest factor (CF). CCDF can give significant insight into the behavior of the power amplifier as it is driven harder into saturation by measuring changes in peak to average ratio (PAR) and crest factor (CF) of the input and output signals simultaneously, while providing a graphical view of the compression of the amplifier in real-time. The Statistical Analysis tool of the PSP Series creates a CCDF graph of the input & output signals and tabular format displaying of cursor readings, average, peak and peak to average power as shown in Figure 5 and Figure 6 respectively.

The crest factor can be computed at any percent probability point; so depending on the system requirements and specifications, the user can place the cursor at desired probability point where the crest factor measurement is to be made. Similarly, in order to measure P1 dB of an amplifier the cursors can be moved along the CCDF curve to the probability point where the difference between input and output crest factor is 1 dB, allowing the designer to determine the P1 dB compression characteristics of the amplifier.

AR's PSP series wideband USB pulse power sensors are the instrument of choice for FCC EMC compliance testing of wireless electrical and electronic products called Intentional Radiators that may produce radio frequency pollution (not infrared or ultrasonic energy). In general, radiated emissions are usually associated with unintentional radiators, but intentional radiators can also have unwanted emissions at frequencies outside their intended transmission frequency band.

AR's PSP series wideband USB pulse power sensors and new

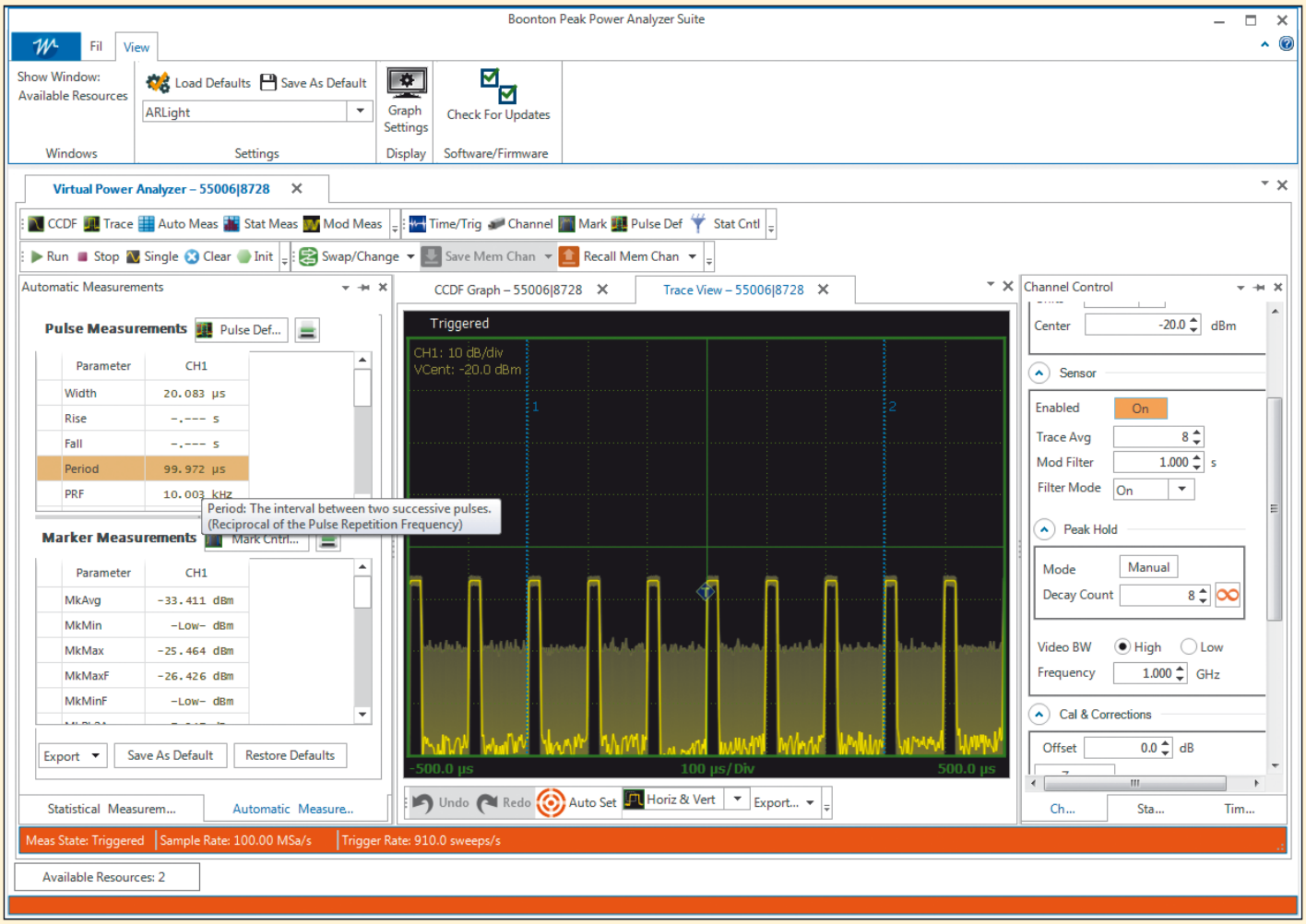

Figure 4: AR's pulsewARe® Control software for PSP sensors

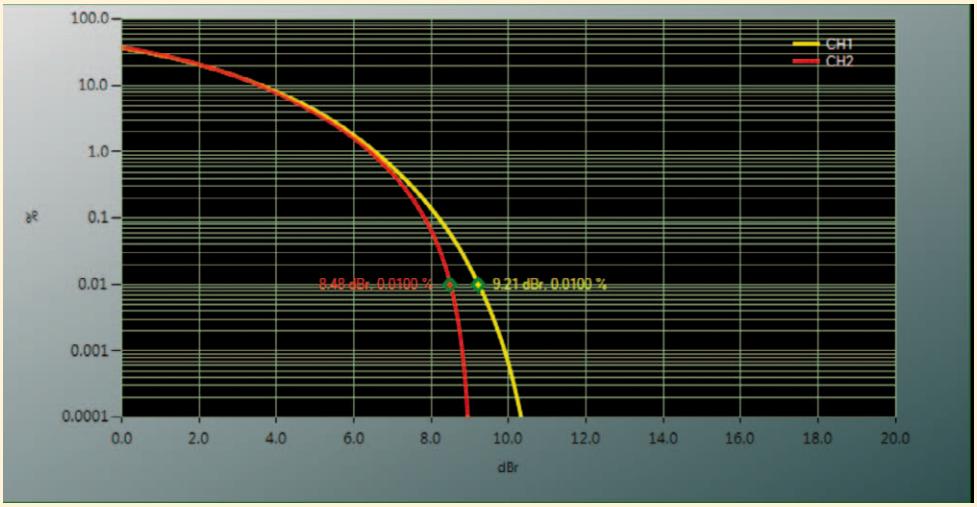

Figure 5: Amplifier compression – Input CH1 10.25 dB crest factor – yellow trace, Output CH2 9.0 dB crest factor – red trace. Amplifier compression 1.25 dB

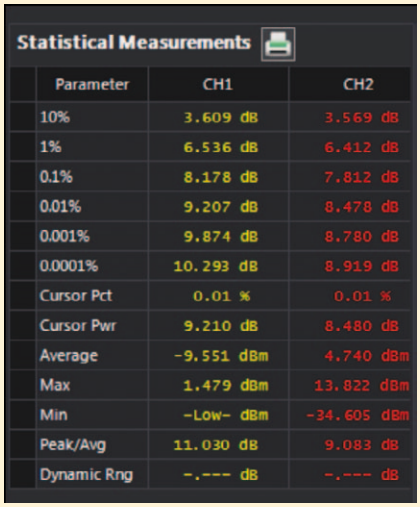

Statistical Measurements

Parameter	CH1	CH2
10%	3.609 dB	3.569 dB
1%	6.536 dB	6.412 dB
0.1%	8.178 dB	7.812 dB
0.01%	9.207 dB	8.478 dB
0.001%	9.874 dB	8.780 dB
0.0001%	10.293 dB	8.919 dB
Cursor Pct	0.01 %	0.01 %
Cursor Pwr	9.210 dB	8.480 dB
Average	-9.551 dBm	4.740 dBm
Max	1.479 dBm	13.822 dBm
Min	-Low- dBm	-34.605 dBm
Peak/Avg	11.030 dB	9.083 dB
Dynamic Rng	-.--- dB	-.--- dB

Figure 6: Tabular format displaying cursor readings, average, peak and peak to average power

Solid state pulsed amplifiers are products of choice to perform EMC and RF immunity testing for numerous market applications. The PSP series instruments can precisely measure the pulse shape, characteristics and peak amplitude being produced by the amplifier.

Conclusion

The USB pulse power sensors are ideal for radiated immunity, telecommunications and intentional radiator EMC testing, as well as applications in manufacturing, design and research. The design of these products allows for fast, accurate and reliable RF power measurements of a wide range of pulsed, modulated and CW signals. Additionally, the PSP series are perfect for precisely measuring the pulse characteristics of AR's SP-series solid state pulse amplifiers.

If you would like to learn more about our new PSP Series Wideband USB pulse power sensors and PulsewARe software, feel free to contact one of our application engineers or visit our website at

http://www.arworld.us ◄